MURR ELEKTRONIK
stay connected

Valve plug MDC06-4s / M12 male 0° Xtreme

PUR 4x0.75 bk UL/CSA+drag ch. 0.6m

Xtreme - Outdoor
Male straight – male straight
The resistance to aggressive media should be individually tested for your application. Further details on request.
Further cable lengths on request.
Stainless steel 1.4305 (V2A)
6...230 V AC/DC
4-pole
without components
without cable sleeves
compatibel to Deutsch DT06-4S
Plastic housings with good resistance against chemicals and oils.

Link to Product

Illustration

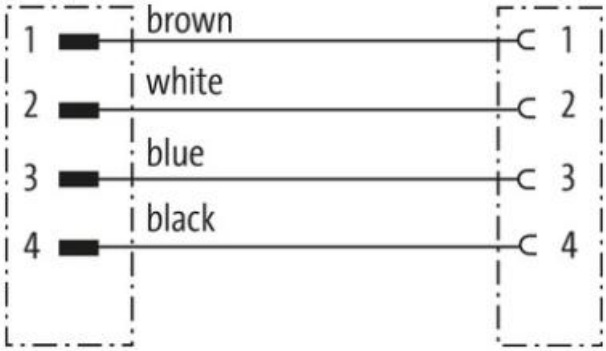

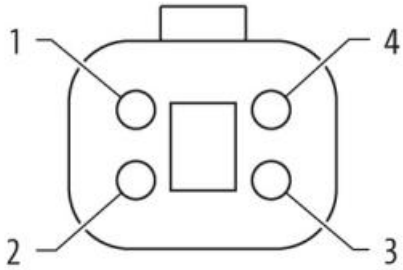

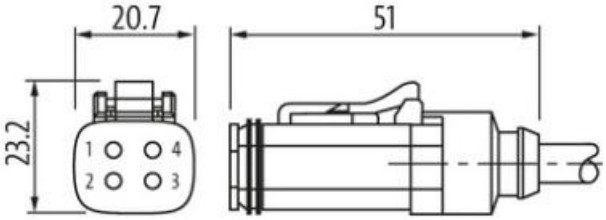

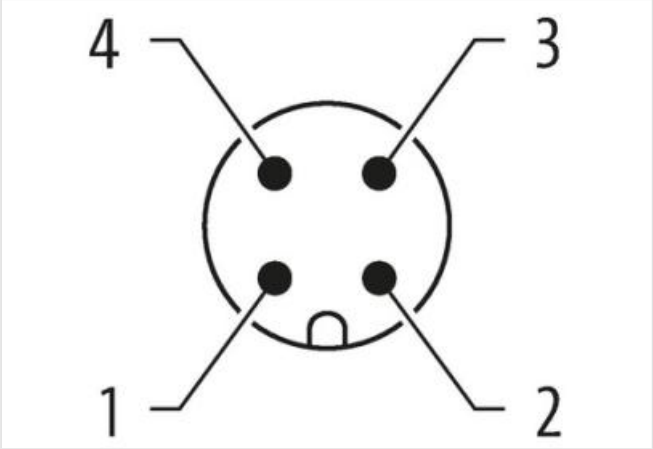

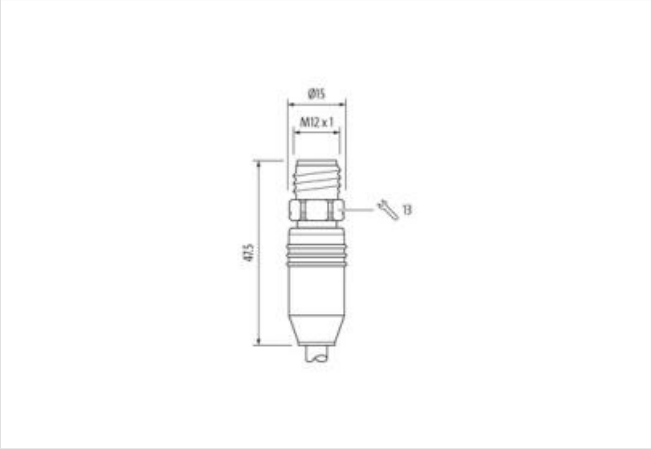

Product may differ from Image

Cable length	0,6 m
Side 1	
Mounting method	inserted, screwed
Coating contact	nickel plated
Family construction form	M12
Coding	A
Material contact	Copper alloy
Material	PUR
No. of poles	4
Width across flats	SW14
Degree of protection (EN IEC 60529)	IP65, IP66K, IP68
Side 2	
Tightening torque	0,6 Nm
Mounting method	inserted, screwed
Coating contact	nickel plated
Family construction form	Amphenol AT06-4S
Thread	M12 x 1
Material	PA
No. of poles	4
Degree of protection (EN IEC 60529)	IP68
Commercial data	
ECLASS-6.0	27279218
ECLASS-7.0	27279218
ECLASS-8.0	27279218
ECLASS-9.0	27060311
ETIM-5.0	EC001855
customs tariff number	85444290
GTIN	4065909050569
Packaging unit	1
Electrical data | Supply	
Operating voltage AC min.	6 V
Operating voltage AC max.	230 V
Operating voltage DC min.	6 V
Operating voltage DC max.	230 V
Current operating per contact max.	4 A
Diagnostics	

Status indication LED	no
Installation | Connection	
Gender	male
Device protection | Electrical	
Pollution Degree	3
Rated surge voltage	2,5 kV
Material group (IEC 60664-1)	I
Additional suppressor	without components
Mechanical data | Material data	
Material gasket	Silicon
Locking material	Stainless steel 1.4305 (V2A)
Mechanical data | Mounting data	
Mounting method	inserted, screwed, Shaking protection
Looking techniques	Snap-in connector
Environmental characteristics | Climatic	
Operating temperature min.	-25 °C
Operating temperature max.	85 °C
Additional condition temperature range	depending on cable quality
Installation | Cable	
Cable identification	569
Cable Type	3
Jacket Color	black
Type of Certificate	cURus
Amount stranding	1
Stranding	4 wires twisted
wire arrangement	brown, black, blue, white
No. of bending cycles (C-track)	10 Mio. @ 25 °C
Cable weigth	62,7 g/m
Material jacket	PUR
Shore hardness jacket	90 ± 5 Shore A
Freedom from ingredients (jacket)	lead-free, cadmium-free, CFC-free, halogen-free, silicone-free
Outer-diameter (jacket)	6,5 mm
Tolerance outer diameter (sheath)	± 5 %
Material wire insulation	PP
Amount wires	4
Outer diameter insulation	1,85 mm
Outer diameter tolerance core insulation	± 5 %
Shore hardness wire insulation	70 ± 5 Shore D
Ingredient freeness wire insulation	lead-free, cadmium-free, CFC-free, halogen-free, silicone-free
Amount strands (wire)	42
Diameter of single wires	0,15 mm
Conductor crosssection (wire)	0,75 mm²
Material conductor wire	Stranded copper wire, bare
Conductor type (wire)	strand class 6
Traversing distance (C-track)	10 m @ 25 °C | horizontal
Current load capacity (standard)	to DIN VDE 0298-4
Current load capacity min. wire	9,6 A
Electrical resistance line constant wire	26 Ω/km @ 20 °C
Nominal voltage power AC max.	300 V
Power frequency withstand voltage power (wire - jacket)	2,5 kV @ 60 s
AC withstand voltage power (wire - wire)	2,5 kV @ 60 s

Min. operating temperature (static)	-40 °C
Max. operating temperature (fixed)	80 °C / 90 °C @ 10000 h Operation
Operating temperature min. (dynamic)	-25 °C
Operating temperature max. (dynamic)	80 °C / 90 °C @ 10000 h Operation
UV resistance	DIN EN ISO 4892-2 A
Flame resistance	IEC 60332-2-2 | UL 1581 § 1100 FT2 | UL 1581 § 1090
chemical resistance	Good, application-related testing
Gasoline resistance	Good, application-related testing
Oil resistance	Good, application-related testing | DIN EN 60811-404
Bending radius (fixed)	5 x Outer diameter
Bending radius (dynamic)	10 x Outer diameter
No. of torsion cycles	2 Mio.
Torsion speed	35 cycles/min
Torsion stress	± 180 °/m