MURR ELEKTRONIK
stay connected

M12 male 0° / M12 female 90° A-cod. LED

PVC 4x0.34 gy UL/CSA 12m

Male straight – female 90°
M12 – M12, 4-pole
3× LED (PNP), (NPN) on request
Art-No. 7005 - M12 Lite - (plastic hexagonal screw) on request
Plastic housings with good resistance against chemicals and oils.
The resistance to aggressive media should be individually tested for your application. Further details on request.
Further cable lengths on request.

Link to Product

Illustration

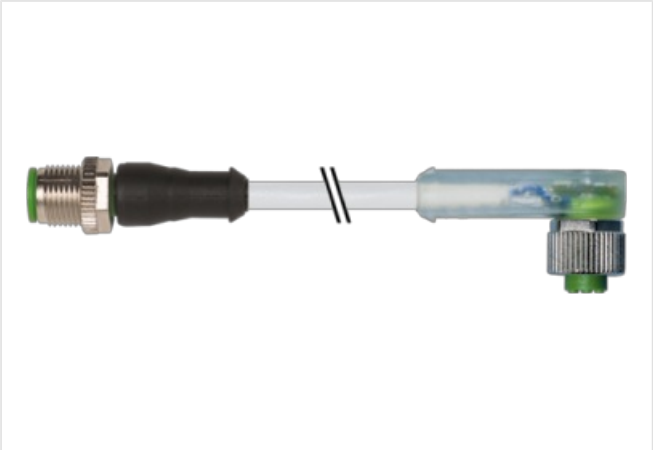

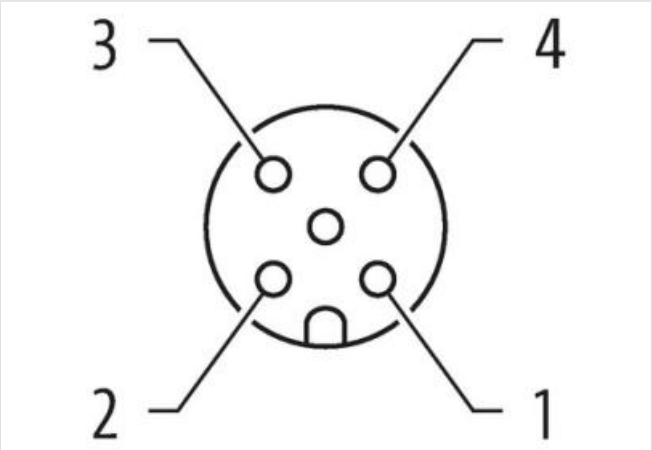

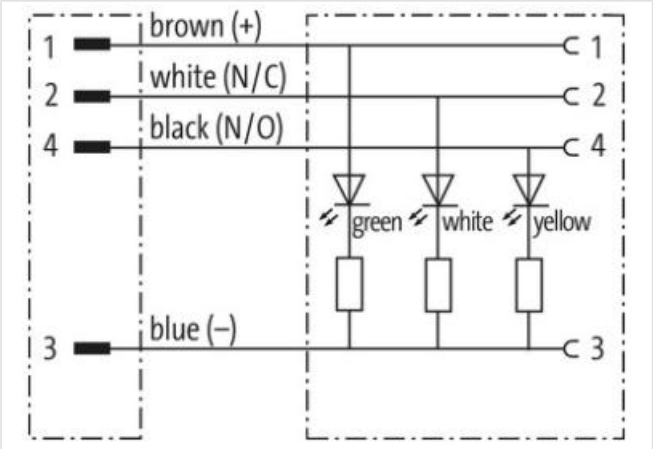

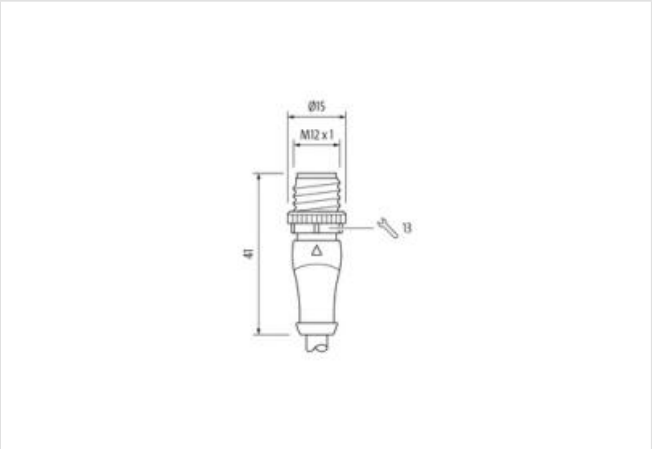

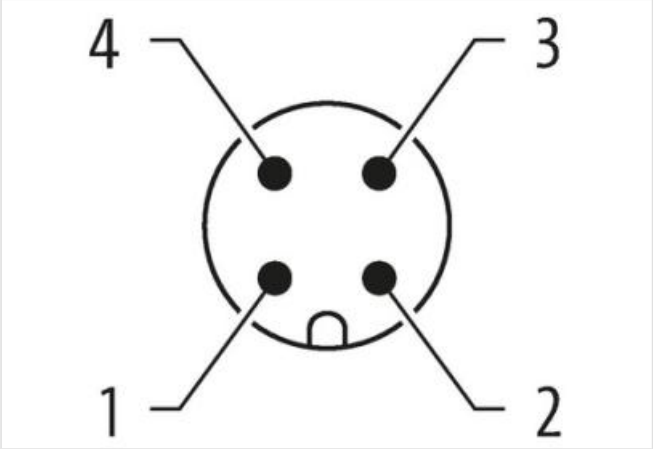

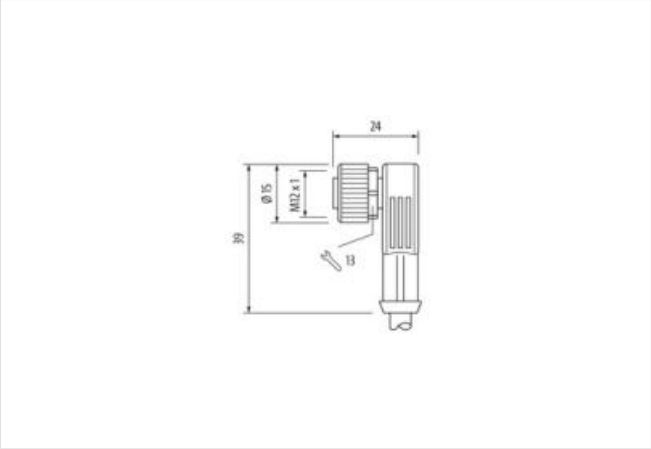

Product may differ from Image

Cable length	12 m
Side 1	
Tightening torque	0,6 Nm
Mounting method	inserted, screwed
Family construction form	M12
Thread	M12 x 1
suitable for corrugated tube (internal Ø)	10 mm
Material	PUR
Width across flats	SW13
Degree of protection (EN IEC 60529)	IP65, IP66K, IP67
Side 2	
Tightening torque	0,6 Nm
Mounting method	inserted, screwed
Family construction form	M12
Thread	M12 x 1
suitable for corrugated tube (internal Ø)	10 mm
Material	PUR
Width across flats	SW13
Degree of protection (EN IEC 60529)	IP65, IP66K, IP67
Commercial data	
ECLASS-6.0	27279218
ECLASS-7.0	27279218
ECLASS-8.0	27279218
ECLASS-9.0	27060311
ECLASS-10.1	27060311
ECLASS-11.1	27060311
ECLASS-12.0	27060311
ETIM-5.0	EC001855
customs tariff number	85444290
GTIN	4048879421539
Packaging unit	1
Electrical data | Supply	

Operating voltage DC	24 V
Operating voltage DC min.	18 V
Operating voltage DC max.	30 V
Operating voltage DC max. (UL-listed)	30 V
Current operating per contact max.	4 A
Diagnostics	
Status indication LED	green, white, yellow
Installation | Connection	
Mounting set	M12 x 1
Device protection | Electrical	
Additional condition protection degree	inserted, screwed
Pollution Degree	3
Rated surge voltage	0,8 kV
Material group (IEC 60664-1)	I
Mechanical data | Material data	
Coating locking	Nickeled
Coating of fitting	nickel plated
Locking material	Zinc die-casting
Material screw connection	Zinc die-casting
Mechanical data | Mounting data	
Mounting method	inserted, screwed, Shaking protection
Environmental characteristics | Climatic	
Operating temperature min.	-25 °C
Operating temperature max.	85 °C
Additional condition temperature range	depending on cable quality
Conformity	
Product standard	DIN EN 61076-2-101 (M12)
Installation | Cable	
Cable identification	214
Cable Type	1
Jacket Color	gray
Type of Certificate	cURus
Amount stranding	1
Stranding	4 wires twisted
wire arrangement	brown, black, blue, white
Cable weigth	40,7 g/m
Material jacket	PVC
Shore hardness jacket	85 ± 5 Shore A
Freedom from ingredients (jacket)	lead-free, cadmium-free, CFC-free, silicone-free
Outer-diameter (jacket)	5 mm
Tolerance outer diameter (sheath)	± 5 %
Material wire insulation	PVC
Amount wires	4
Outer diameter insulation	1,25 mm
Outer diameter tolerance core insulation	± 5 %
Shore hardness wire insulation	45 ± 5 Shore D
Material properties wire insulation	good machinability
Ingredient freeness wire insulation	lead-free, cadmium-free, CFC-free, silicone-free
Amount strands (wire)	19
Diameter of single wires	0,15 mm

Conductor crosssection (wire)	0,34 mm²
Material conductor wire	Stranded copper wire, bare
Conductor type (wire)	Strand class 5
Current load capacity (standard)	to DIN VDE 0298-4
Current load capacity min. wire	4,8 A
Electrical resistance line constant wire	57 Ω/km @ 20 °C
Nominal voltage power AC max.	300 V
Power frequency withstand voltage power (wire - jacket)	2 kV @ 60 s
AC withstand voltage power (wire - wire)	2 kV @ 60 s
Min. operating temperature (static)	-30 °C
Max. operating temperature (fixed)	80 °C
Operating temperature min. (dynamic)	-5 °C
Operating temperature max. (dynamic)	80 °C
Flame resistance	UL 1581 § 1100 FT2 | IEC 60332-2-2 | UL 1581 § 1090
chemical resistance	Good, application-related testing
Gasoline resistance	Good, application-related testing
Oil resistance	Good, application-related testing | DIN EN 60811-404
Bending radius (fixed)	5 x Outer diameter
Bending radius (dynamic)	10 x Outer diameter