MURR ELEKTRONIK
stay connected

M12 female recept. Y-cod. shielded rear

PUR AWG20/26 shielded bk UL/CSA+drag ch. 1.5m

Ethernet CAT5
Flange female
Good chemical and oil resistance (oil resistance does not apply to use with PVC cable)
M12, 8-pole
Y-coded
shielded
Transmission properties with channel transmission up to 50 m
Further cable lengths on request.
The resistance to aggressive media should be individually tested for your application. Further details on request.

Link to Product

Illustration

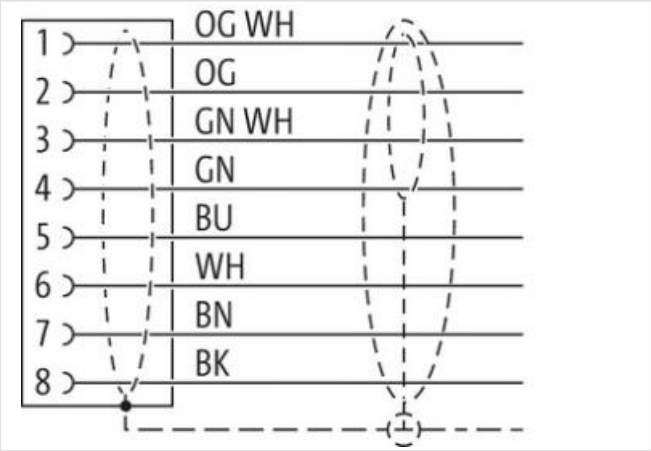

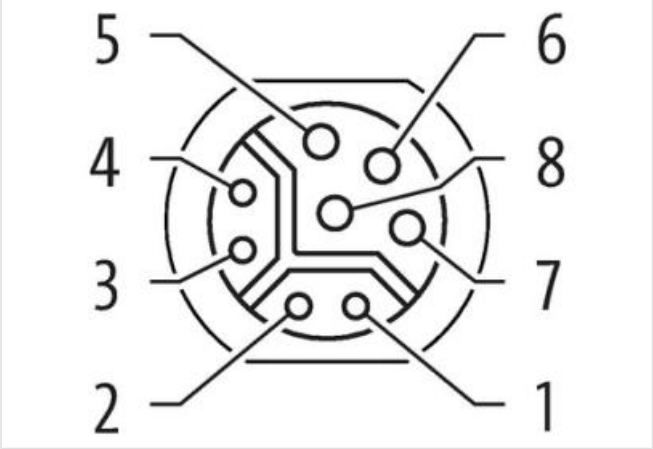

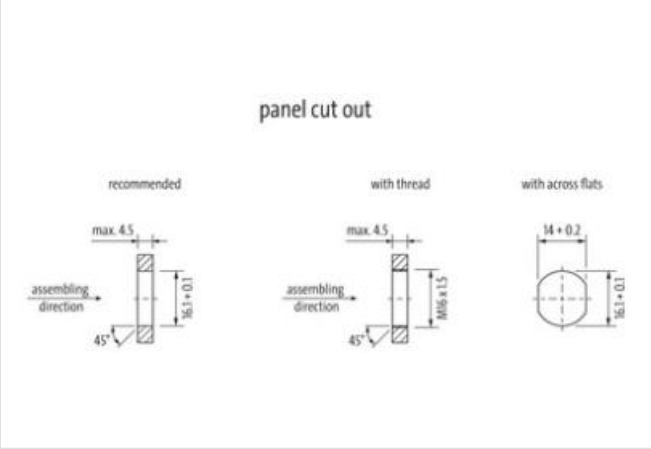

The information in this Product-PDF has been compiled with the utmost care.
Liability for the correctness completeness and topicality of the information is restricted to gross negligence. Version: 2024-05-09

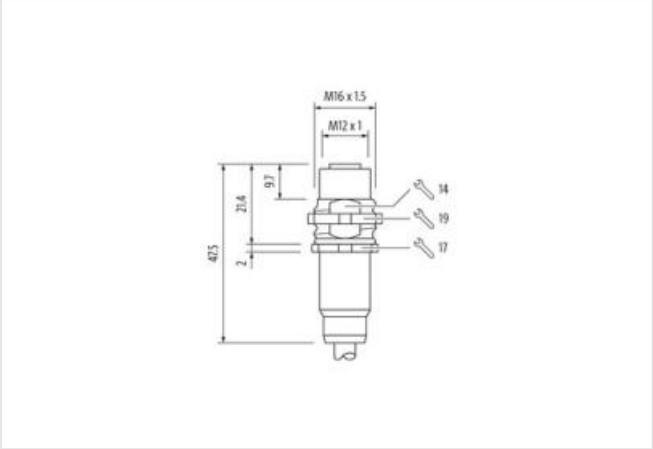

Product may differ from Image

Cable length	1,5 m
Side 1	
Tightening torque	0,6 Nm
Mounting method	inserted, screwed
Coating head	nickel plated
Family construction form	M12
Thread	M12 x 1
Coding	Y
Material	Brass
No. of poles	8
Degree of protection (EN IEC 60529)	IP67
Commercial data	
ECLASS-6.0	27279220
ECLASS-6.1	27279220
ECLASS-7.0	27440103
ECLASS-8.0	27440103
ECLASS-9.0	27440103
ECLASS-10.1	27440103
ECLASS-11.1	27440103
ECLASS-12.0	27440103
ETIM-5.0	EC001855
customs tariff number	85444290
GTIN	4048879806305
Packaging unit	1
Electrical data | Supply	
Operating voltage AC max.	50 V
Operating voltage DC max.	50 V
Operating voltage AC (UL-listed)	30 V
Operating voltage DC (UL-listed)	30 V
Operating current per data contact max.	0,5 A
Operating current per power contact max.	6 A
Industrial communication	

The information in this Product-PDF has been compiled with the utmost care.
Liability for the correctness completeness and topicality of the information is restricted to gross negligence. Version: 2024-05-09

Transfer parameters	CAT5, Class D (ISO/IEC 11801:2002), (EN 50173-1)
Data transmission rate max.	100 MBit/s
Industrial communication | Ethernet functionality	
duplex	Full duplex
Installation | Connection	
Mounting set	M16 x 1.5
Width across flats	SW19
Device protection | Electrical	
Protection NEMA	3, 4, 6P
Additional condition protection degree	inserted, screwed
Pollution Degree	3
Rated surge voltage	0,8 kV
Material group (IEC 60664-1)	I
Mechanical data | Material data	
Coating housing	nickel plated
Coating locking	nickel plated
Coating of fitting	nickel plated
Locking material	Brass
Material screw connection	Brass
Mechanical data | Mounting data	
Mounting method	Schraubgewinde
Looking techniques	Schraubgewinde
Environmental characteristics | Climatic	
Operating temperature min.	-25 °C
Operating temperature max.	85 °C
Additional condition temperature range	depending on cable quality
Important installation notes	
Note on strain relief	Protect the connectors by suitable measures from mechanical loads, e.g. by the usage of cable ties.
Note on bending radius	**Attention:** Observe the permissible bending radii when laying cables, as the IP protection class can be endangered by excessive bending forces.
Approvals	
UL 50E	yes
Installation | Cable	
Cable identification	805
Jacket Color	black
Type of Certificate	cURus
Amount stranding	1
Stranding	4 wires around 1 Filler twisted
Amount stranding (type 2)	1
Stranding (type 2)	4 wires around Stranding combination with Filler twisted
Cable shielding (type)	copper braid, tinned
Cable shielding (coverage)	85 %
Pair shielding (type)	copper braid, tinned
Banding	Fleece, Foil
Filler	yes
wire arrangement	black, brown, white, blue, (orange-white, green, orange, green-white)
Traversing distance (C-track)	5 m
Cable weigth	107,8 g/m
Material jacket	PUR
Shore hardness jacket	90 ± 5 Shore A
Freedom from ingredients (jacket)	lead-free, cadmium-free, CFC-free, halogen-free, silicone-free

The information in this Product-PDF has been compiled with the utmost care.
Liability for the correctness completeness and topicality of the information is restricted to gross negligence. Version: 2024-05-09

Outer-diameter (jacket)	8,1 mm
Tolerance outer diameter (sheath)	± 5 %
Material wire insulation	PP
Amount wires	4
Outer diameter insulation	1,5 mm
Outer diameter tolerance core insulation	± 5 %
Shore hardness wire insulation	55 ± 5 Shore D
Ingredient freeness wire insulation	lead-free, cadmium-free, CFC-free, halogen-free, silicone-free
Amount strands (wire)	19
Diameter of single wires	20 AWG
Conductor crosssection (wire)	20 AWG
Material conductor wire	Stranded copper wire, bare
Material wire insulation (Data)	PP
Outer diameter wire insulation (Data)	1,1 mm
Tolerance outer diameter wire insulation (data)	± 5 %
Shore hardness wire insulation (Data)	55 ± 5 Shore D
Ingredient freeness wire insulation (Data)	lead-free, cadmium-free, CFC-free, halogen-free, silicone-free
Amount wires (Data)	4
Amount strands wire (Data)	19
Diameter of single wires (Data)	26 AWG
Conductor crosssection wire (Data)	26 AWG
Material conductor wire (Data)	Stranded copper wire, bare
Nominal voltage AC max.	60 V
Current load capacity (standard)	to DIN VDE 0298-4
Current load capacity min. wire	5,9 A
Current load capacity min. Wire (Data)	2 A
Characteristic impedance	100 Ω ± 15 % @ 1 MHz
Electrical resistance line constant wire	35 Ω/km
Electrical resistance coating wire (Data)	140 Ω/km
AC withstand voltage (wire - wire)	1 kV @ 60 s
Electrical capacity line constant (wire - wire)	52000 pF/km
Power frequency withstand voltage (wire - jacket)	1 kV @ 60 s
AC withstand voltage (wire - shield)	1 kV @ 60 s
Min. operating temperature (static)	-50 °C
Max. operating temperature (fixed)	80 °C / 90 °C @ 10000 h Operation
Operating temperature min. (dynamic)	-40 °C
Operating temperature max. (dynamic)	80 °C / 90 °C @ 10000 h Operation
Flame resistance	UL 1581 § 1090 | UL 1581 § 1100 FT2 | IEC 60332-2-2
chemical resistance	Good, application-related testing
Gasoline resistance	Good, application-related testing
Oil resistance	DIN EN 60811-404 | Good, application-related testing
Bending radius (installation)	x Outer diameter
Bending radius (fixed)	5 x Outer diameter
Bending radius (dynamic)	10 x Outer diameter
Travel speed (C-track)	5 Mio.
No. of torsion cycles	2 Mio.
Torsion stress	± 30 °/m
Torsion speed	35 cycles/min

The information in this Product-PDF has been compiled with the utmost care.
Liability for the correctness completeness and topicality of the information is restricted to gross negligence. Version: 2024-05-09