MURR ELEKTRONIK
stay connected

MST SINGLE-PHASE CONTROL AND ISOLATION TRANSFORMER

P:630VA IN:400/440VAC OUT:115/230VAC

Single-phase - Control and Isolation Transformers
630 VA
Isolation class T 40/B
Other voltages on request.

Link to Product

Illustration

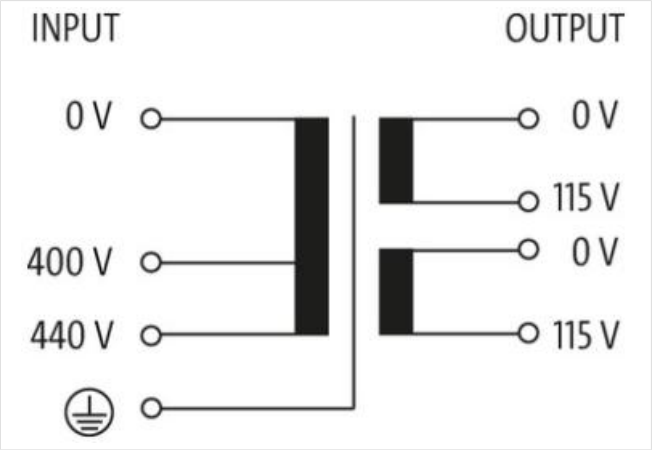

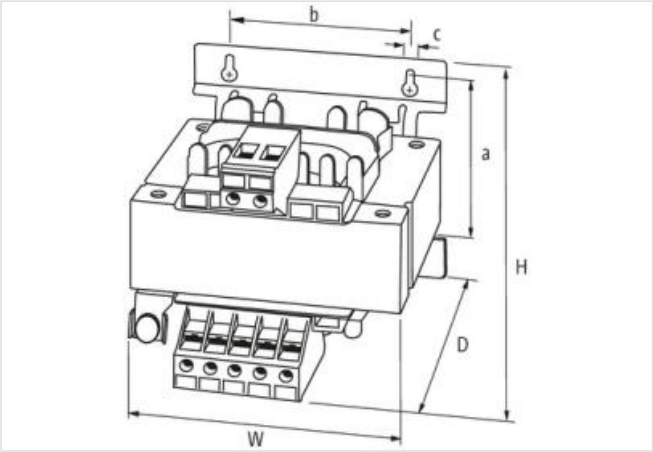

Product may differ from Image

Commercial data

ECLASS-6.0	27031202
ECLASS-6.1	27031302
ECLASS-7.0	27031302
ECLASS-8.0	27031302
ECLASS-9.0	27031302
ECLASS-10.1	27031302

The information in this Product-PDF has been compiled with the utmost care.
Liability for the correctness completeness and topicality of the information is restricted to gross negligence. Version: 2024-04-25

ECLASS-11.1	27031302
ECLASS-12.0	27031302
ETIM-5.0	EC002486
customs tariff number	85043180
GTIN	4048879336017
Packaging unit	1
Electrical data | Supply	
Power frequency	50 ... 60 Hz
Electrical data | Input	
Input voltage 1 AC	400 V
Input voltage 2 AC	440 V
Input current at input voltage 1 AC	1,72 A
Input current at input voltage 2 AC	1,56 A
Inrush current at input voltage 1	15 A
Inrush current at input voltage 2	13,6 A
Short-circuit current at input voltage 1	39 A
Short-circuit current at input voltage 2	36 A
Electrical data | Output	
Output voltage	1 × 230 / 1 × 115 / 2 × 115 V AC
Output voltage AC 1	230 V
Output voltage AC 2	115 V
Output voltage adjustable	yes
Power rating AC max.	630 VA
Device protection | Electrical	
Insulation test voltage input - output	5,9 kV
Mechanical data | Mounting data	
Suitable for mounting type	Schlüssellochaufhängung
Mounting dimension a	90,6 mm
Mounting dimension b	122 mm
Mounting dimension c	7 mm
Height	113 mm
Width	150 mm
Depth	145 mm
Diameter bore	7 mm
Length bore	14 mm
Environmental characteristics | Climatic	
Operating temperature min.	-20 °C
Operating temperature max.	40 °C
Storage temperature min.	-40 °C
Storage temperature max.	80 °C
Conformity	
Product standard	EN 61558-2-6, EN 62041 category 0
Connection type 3	
Connection type 1	Input
Connection type 2	Output
Connection	Screw terminals SK
Family construction form	terminal
Gender	female
No. of poles	3
PIN 2	400 V
PIN 3	440 V

The information in this Product-PDF has been compiled with the utmost care.
Liability for the correctness completeness and topicality of the information is restricted to gross negligence. Version: 2024-04-25

Connection	Screw terminals SK
Family construction form	terminal
Gender	female
No. of poles	4
PIN 2	115 V
PIN 4	115 V
Connection	Screw terminals SK
Family construction form	terminal
Gender	female
Color contact carrier	metallic
No. of poles	1
PIN 1	PE

The information in this Product-PDF has been compiled with the utmost care.
Liability for the correctness completeness and topicality of the information is restricted to gross negligence. Version: 2024-04-25