stay connected

MIRO 6.2 IMPULSE EXTENSION MODULES

IN: 24 VDC - OUT: 24 VDC / 0.1 A

Transistor output
Impulse expansion: 0.1...10 s
Screw terminals

Link to Product

Illustration

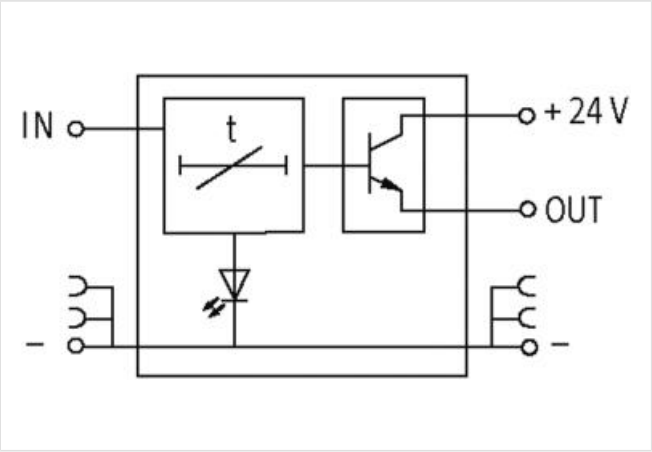

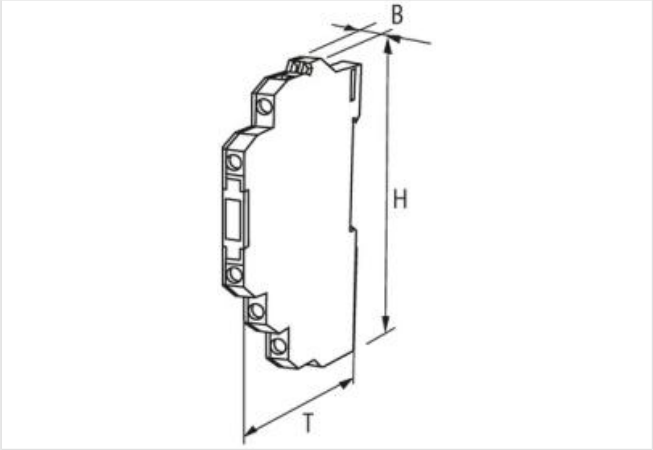

Product may differ from Image

Commercial data

ECLASS-6.0	27210990
ECLASS-6.1	27371790
ECLASS-7.0	27371790
ECLASS-8.0	27371605
ECLASS-9.0	27371605
ECLASS-10.1	27371605

The information in this Product-PDF has been compiled with the utmost care.
Liability for the correctness completeness and topicality of the information is restricted to gross negligence. Version: 2024-04-20

ECLASS-11.1	27371605
ECLASS-12.0	27371605
ETIM-5.0	EC001439
customs tariff number	85437090
GTIN	4048879026963
Packaging unit	1
Electrical data | Input	
Input voltage DC min.	19 V
Input voltage DC max.	29 V
Pulse length min.	0,5 ms
Control voltage DC min.	16 V
Control voltage DC max.	32 V
Electrical data | Output	
Output voltage DC	24 V
Pulse time min.	0,1 s
Pulse time max.	10 s
Switching current max.	100 mA
Mechanical data | Mounting data	
Mounting method	geschnappt
Suitable for mounting type	mounting rail, (EN 60715)
Height	91 mm
Width	6,2 mm
Depth	71 mm
Environmental characteristics | Climatic	
Operating temperature min.	0 °C
Operating temperature max.	60 °C
Connection type 4	
Connection	Screw terminals SK
Family construction form	terminal
Gender	female
Color contact carrier	green
No. of poles	1
PIN 1	+
Connection	Screw terminals SK
Family construction form	terminal
Gender	female
Color contact carrier	green
No. of poles	1
PIN 1	-
Connection	Screw terminals SK
Family construction form	terminal
Gender	female
Color contact carrier	green
No. of poles	1
PIN 1	Out
Connection	Screw terminals SK
Family construction form	terminal
Gender	female
Color contact carrier	green
No. of poles	1
PIN 1	In

The information in this Product-PDF has been compiled with the utmost care.
Liability for the correctness completeness and topicality of the information is restricted to gross negligence. Version: 2024-04-20