MURR ELEKTRONIK
stay connected

SIEMENS CONTACTOR SUPPRESSOR

Varistor, 24VAC/DC

24 V AC/DC
VDR
For other configurations and voltages, please inquire.

Link to Product

Illustration

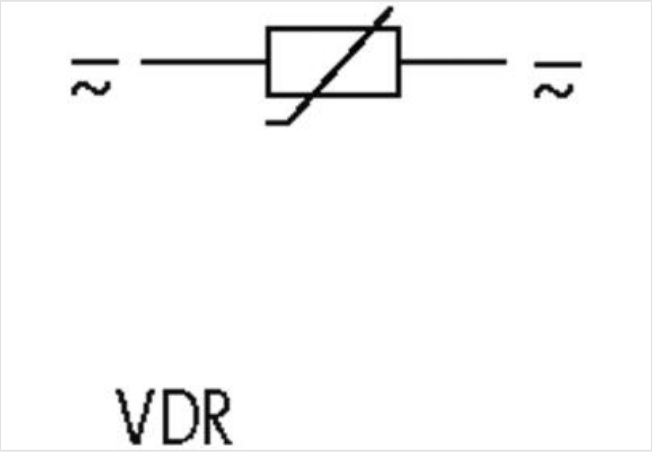

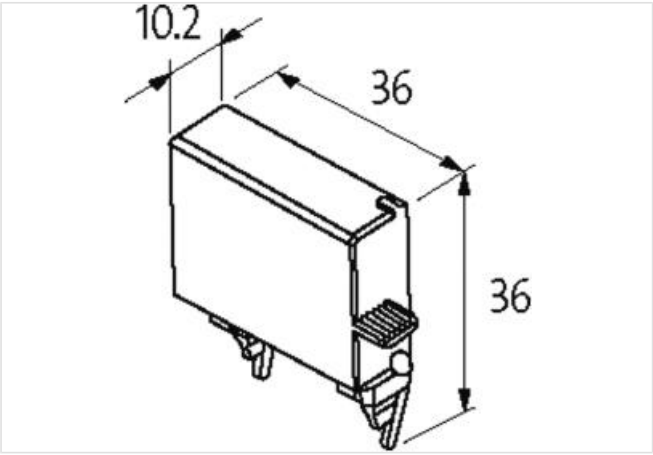

Product may differ from Image

Commercial data

ECLASS-6.0	27371013
ECLASS-6.1	27371013
ECLASS-7.0	27371013
ECLASS-8.0	27371013
ECLASS-9.0	27371013
ECLASS-10.1	27371013

The information in this Product-PDF has been compiled with the utmost care.
Liability for the correctness completeness and topicality of the information is restricted to gross negligence. Version: 2024-04-18

ECLASS-11.1	27371013
ECLASS-12.0	27371013
ETIM-5.0	EC002498
customs tariff number	85363010
GTIN	4048879017534
Packaging unit	1
Compatibility | Compatible with	
Appropriate contactors	3 RT 1.3/1.4, 3 RT 10.24/25/26
Electrical data | Input	
Input voltage AC min.	24 V
Input voltage AC max.	70 V
Input voltage DC min.	24 V
Input voltage DC max.	70 V
Mechanical data | Mounting data	
Height	36 mm
Width	36 mm
Depth	10,2 mm
Environmental characteristics | Climatic	
Operating temperature min.	-20 °C
Operating temperature max.	70 °C

The information in this Product-PDF has been compiled with the utmost care.
Liability for the correctness completeness and topicality of the information is restricted to gross negligence. Version: 2024-04-18